Laborator 10. Radar

Proiect realizat si documentat de: Zuga Tudor Mihai, clasa a X-a D, specializarea matematică-informatică

INTRODUCERE

Experimentul propune realizarea unui radar care detecteaza obiectele din apropiere.

COMPONENTE

1. O placuta Arduino UNO: este o placă de microcontroler open-source bazată pe microcontrolerul Microchip ATmega328P (MCU) și dezvoltată de Arduino.cc și lansată inițial în 2010.

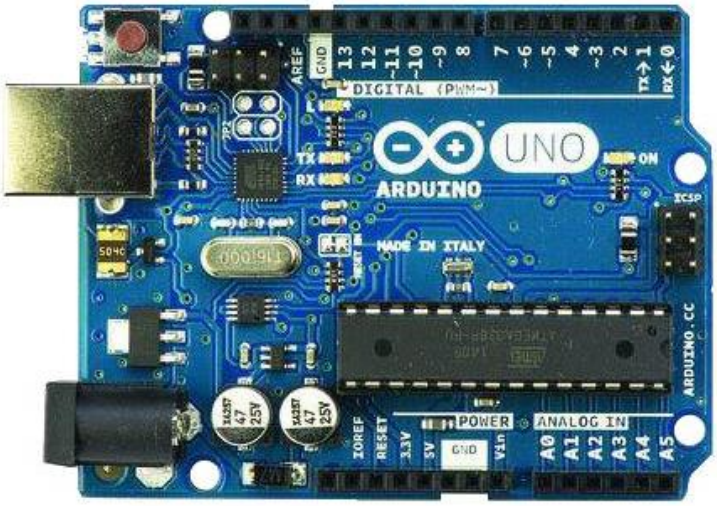

2. Un Breadboard: este o bază de construcție utilizată pentru a construi prototipuri semi-permanente de circuite electronice .

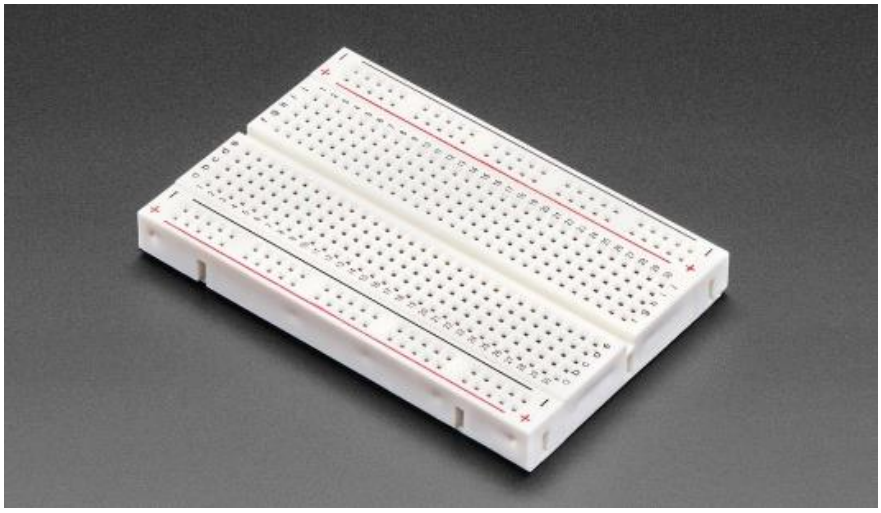

3. Un Servomotor: Servomotorul este un element component al unui sistem care funcțional implică poziții relative reglabile între anumite elemente componente ale sale.

4. Senzor Ultrasonic: funcționează prin transmiterea undelor sonore de înaltă frecvență, care scanează obiectele aflate în jur și emit senzorului informațiile din mediu.

5. Fire pentru a conecta componentele intre ele.

DIAGRAMA CIRCUITULUI

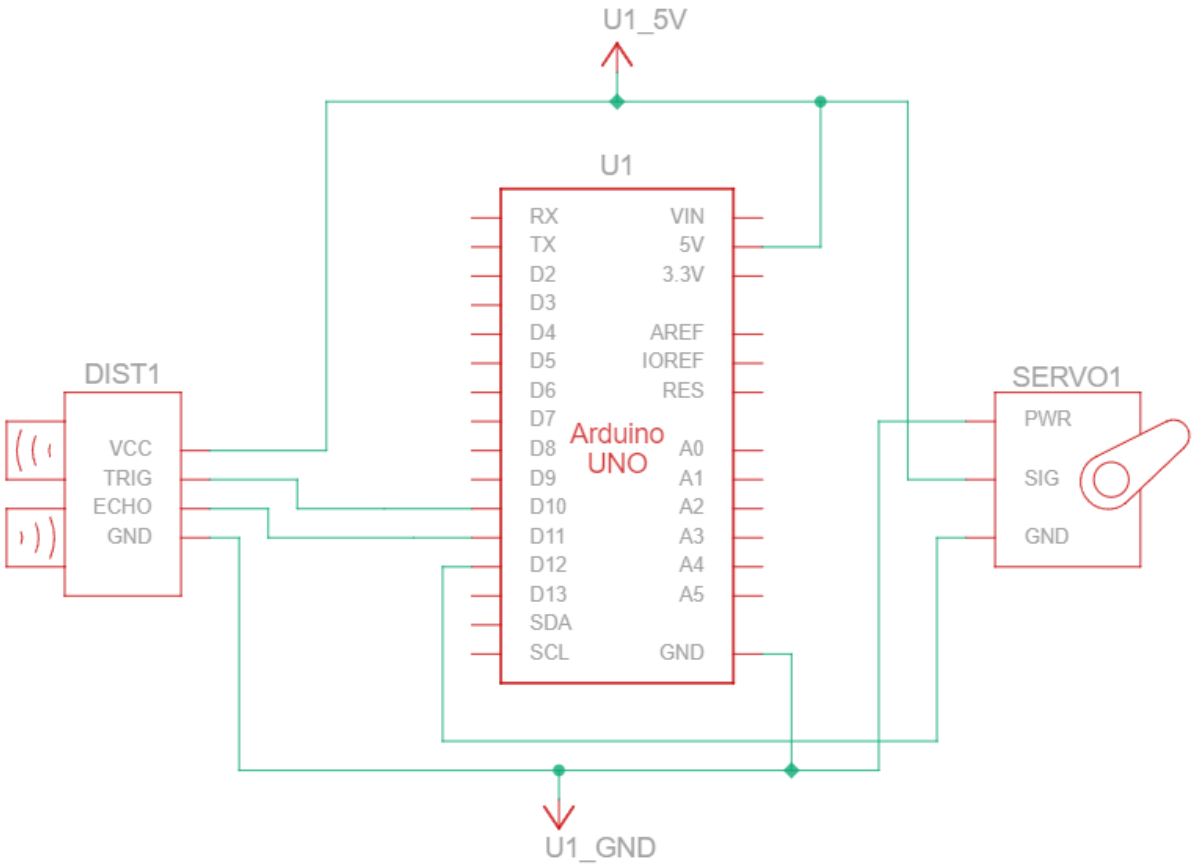

SCHEMA ELECTRICA

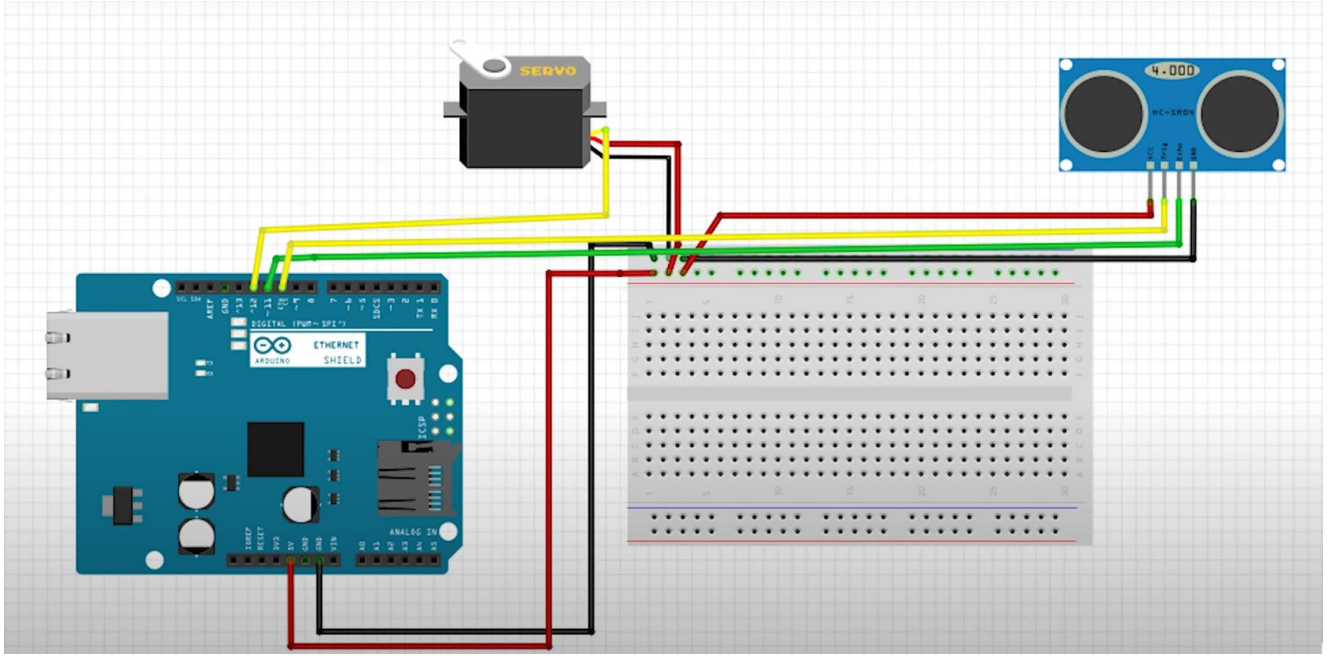

MOD DE LUCRU

1. Am conectat Breadboard-ul cu placa Arduino UNO in slotul 5V si GND ca in imagine:

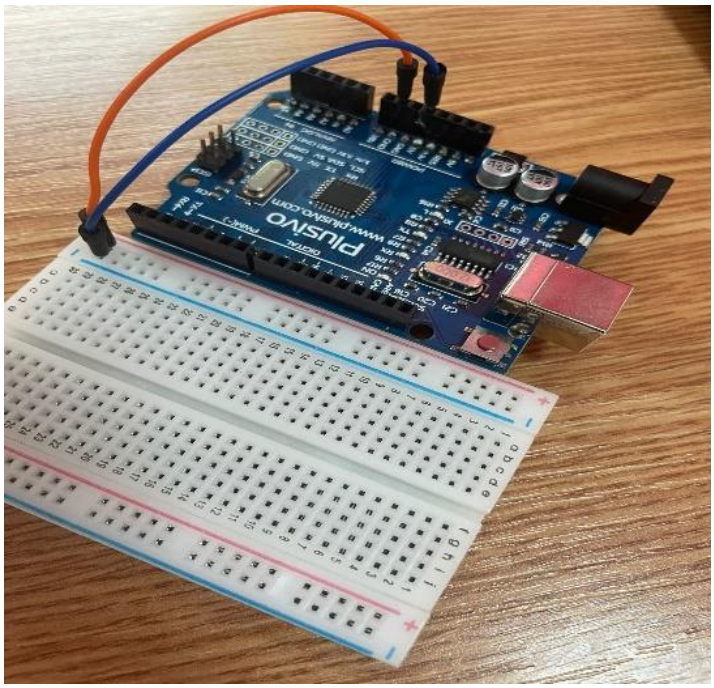

2. Am conectat Servomotorul cu placa Arduino UNO in slotul D12 si cu Breadboard-ul la bornele plus si minus ca in imagine.

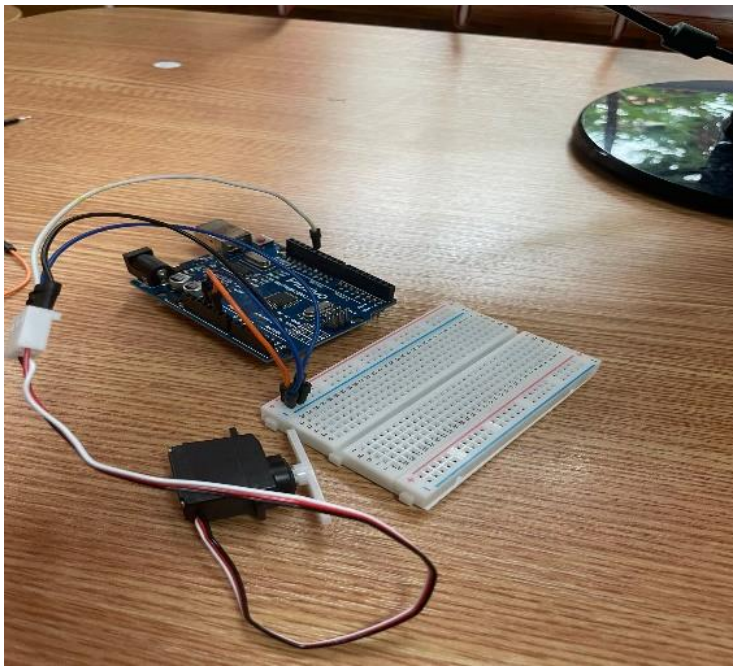

3. Am conectat senzorul ultrasonic cu placa Arduino UNO la pinii D11 si D12 si cu Breadboard-ul in bornele plus si minus.
4. Am lipit senzorul ultrasonic de servomotor cu banda dublu adeziva.
5. Am programat circuitul cu ajutorul unui cablu USB.
6. Folosind programul Processing am creat afișajul radarului.

PROGRAMARE

Am folosit software-ul Arduino IDE.

Codul pe care l-am folosit:

```
// Includes the Servo library
#include <Servo.h>.
// Defines Tirg and Echo pins of the Ultrasonic Sensor
const int trigPin = 10;
const int echoPin = 11;
// Variables for the duration and the distance
long duration;
int distance;
Servo myServo; // Creates a servo object for controlling the servo motor

void setup()
{
  pinMode(trigPin, OUTPUT); // Sets the trigPin as an Output
  pinMode(echoPin, INPUT);  // Sets the echoPin as an Input
  Serial.begin(9600);
  myServo.attach(12); // Defines on which pin is the servo motor attached
}

void loop()
{
  // rotates the servo motor from 15 to 165 degrees
  for (int i = 15; i <= 165; i++)
  {
    myServo.write(i);
    delay(30);
    distance = calculateDistance(); // Calls a function for calculating the
distance measured by the Ultrasonic sensor for each degree

    Serial.print(i);        // Sends the current degree into the Serial Port
    Serial.print(",");      // Sends addition character right next to the
previous value needed later in the Processing IDE for indexing
    Serial.print(distance); // Sends the distance value into the Serial Port
    Serial.print(".");      // Sends addition character right next to the
previous value needed later in the Processing IDE for indexing
  }
  // Repeats the previous lines from 165 to 15 degrees
  for (int i = 165; i > 15; i--)
  {
    myServo.write(i);
    delay(30);
    distance = calculateDistance();
    Serial.print(i);
    Serial.print(",");
    Serial.print(distance);
    Serial.print(".");
```

```
  }
}

// Function for calculating the distance measured by the Ultrasonic sensor
int calculateDistance()
{
  digitalWrite(trigPin, LOW);
  delayMicroseconds(2);
  // Sets the trigPin on HIGH state for 10 micro seconds
  digitalWrite(trigPin, HIGH);
  delayMicroseconds(10);
  digitalWrite(trigPin, LOW);
  duration = pulseIn(echoPin, HIGH); // Reads the echoPin, returns the sound wave
travel time in microseconds
  distance = duration * 0.034 / 2;
  return distance;
}
```

Cod afisare radar in programul Processing:

```
import processing.serial.*;     // imports library for serial communication
import java.awt.event.KeyEvent; // imports library for reading the data from the
serial port
import java.io.IOException;
Serial myPort; // defines Object Serial
// defubes variables
String angle = "";
String distance = "";
String data = "";
String noObject;
float pixsDistance;
int iAngle, iDistance;
int index1 = 0;
int index2 = 0;
PFont orcFont;

void setup()
{
  size(1200, 700); // ***CHANGE THIS TO YOUR SCREEN RESOLUTION***
  smooth();
  myPort = new Serial(this, "COM4", 9600); // starts the serial communication. In
aceasta linie de cod trebuie sa fie scris portul pe care l ati folosit.(in cazul
meu COM4)
  myPort.bufferUntil('.');                 // reads the data from the serial port
up to the character '.'. So actually it reads this: angle,distance.
}

void draw()
{
  fill(98, 245, 31);
  // simulating motion blur and slow fade of the moving line
  noStroke();
```

```
  fill(0, 4);
  rect(0, 0, width, height - height * 0.065);

  fill(98, 245, 31); // green color
  // calls the functions for drawing the radar
  drawRadar();
  drawLine();
  drawObject();
  drawText();
}

void serialEvent(Serial myPort)
{ // starts reading data from the Serial Port
  // reads the data from the Serial Port up to the character '.' and puts it into
the String variable "data".
  data = myPort.readStringUntil('.');
  data = data.substring(0, data.length() - 1);

  index1 = data.indexOf(",");                          // find the character ','
and puts it into the variable "index1"
  angle = data.substring(0, index1);                   // read the data from
position "0" to position of the variable index1 or thats the value of the angle
the Arduino Board sent into the Serial Port
  distance = data.substring(index1 + 1, data.length()); // read the data from
position "index1" to the end of the data pr thats the value of the distance

  // converts the String variables into Integer
  iAngle = int(angle);
  iDistance = int(distance);
}

void drawRadar()
{
  pushMatrix();
  translate(width / 2, height - height * 0.074); // moves the starting coordinats
to new location
  noFill();
  strokeWeight(2);
  stroke(98, 245, 31);
  // draws the arc lines
  arc(0, 0, (width - width * 0.0625), (width - width * 0.0625), PI, TWO_PI);
  arc(0, 0, (width - width * 0.27), (width - width * 0.27), PI, TWO_PI);
  arc(0, 0, (width - width * 0.479), (width - width * 0.479), PI, TWO_PI);
  arc(0, 0, (width - width * 0.687), (width - width * 0.687), PI, TWO_PI);
  // draws the angle lines
  line(-width / 2, 0, width / 2, 0);
  line(0, 0, (-width / 2) * cos(radians(30)), (-width / 2) * sin(radians(30)));
  line(0, 0, (-width / 2) * cos(radians(60)), (-width / 2) * sin(radians(60)));
  line(0, 0, (-width / 2) * cos(radians(90)), (-width / 2) * sin(radians(90)));
  line(0, 0, (-width / 2) * cos(radians(120)), (-width / 2) * sin(radians(120)));
  line(0, 0, (-width / 2) * cos(radians(150)), (-width / 2) * sin(radians(150)));
```

```
  line((-width / 2) * cos(radians(30)), 0, width / 2, 0);
  popMatrix();
}

void drawObject()
{
  pushMatrix();
  translate(width / 2, height - height * 0.074); // moves the starting coordinats
to new location
  strokeWeight(9);
  stroke(255, 10, 10);                                                  // red color
  pixsDistance = iDistance * ((height - height * 0.1666) * 0.025); // covers the
distance from the sensor from cm to pixels
  // limiting the range to 40 cms
  if (iDistance < 40)
  {
    // draws the object according to the angle and the distance
    line(pixsDistance * cos(radians(iAngle)), -pixsDistance *
sin(radians(iAngle)), (width - width * 0.505) * cos(radians(iAngle)), -(width -
width * 0.505) * sin(radians(iAngle)));
  }
  popMatrix();
}

void drawLine()
{
  pushMatrix();
  strokeWeight(9);
  stroke(30, 250, 60);
  translate(width / 2, height - height *
0.074);                                                                 // moves
the starting coordinats to new location
  line(0, 0, (height - height * 0.12) * cos(radians(iAngle)), -(height - height *
0.12) * sin(radians(iAngle))); // draws the line according to the angle
  popMatrix();
}

void drawText()
{ // draws the texts on the screen

  pushMatrix();
  if (iDistance > 40)
  {
    noObject = "Out of Range";
  }
  else
  {
    noObject = "In Range";
  }
  fill(0, 0, 0);
  noStroke();
```

```
  rect(0, height - height * 0.0648, width, height);
  fill(98, 245, 31);
  textSize(25);

  text("10cm", width - width * 0.3854, height - height * 0.0833);
  text("20cm", width - width * 0.281, height - height * 0.0833);
  text("30cm", width - width * 0.177, height - height * 0.0833);
  text("40cm", width - width * 0.0729, height - height * 0.0833);
  textSize(40);
  text("Indian Lifehacker ", width - width * 0.875, height - height * 0.0277);
  text("Angle: " + iAngle + " °", width - width * 0.48, height - height *
0.0277);
  text("Distance: ", width - width * 0.26, height - height * 0.0277);
  if (iDistance < 40)
  {
    text("        " + iDistance + " cm", width - width * 0.225, height - height *
0.0277);
  }
  textSize(25);
  fill(98, 245, 60);
  translate((width - width * 0.4994) + width / 2 * cos(radians(30)), (height -
height * 0.0907) - width / 2 * sin(radians(30)));
  rotate(-radians(-60));
  text("30°", 0, 0);
  resetMatrix();
  translate((width - width * 0.503) + width / 2 * cos(radians(60)), (height -
height * 0.0888) - width / 2 * sin(radians(60)));
  rotate(-radians(-30));
  text("60°", 0, 0);
  resetMatrix();
  translate((width - width * 0.507) + width / 2 * cos(radians(90)), (height -
height * 0.0833) - width / 2 * sin(radians(90)));
  rotate(radians(0));
  text("90°", 0, 0);
  resetMatrix();
  translate(width - width * 0.513 + width / 2 * cos(radians(120)), (height -
height * 0.07129) - width / 2 * sin(radians(120)));
  rotate(radians(-30));
  text("120°", 0, 0);
  resetMatrix();
  translate((width - width * 0.5104) + width / 2 * cos(radians(150)), (height -
height * 0.0574) - width / 2 * sin(radians(150)));
  rotate(radians(-60));
  text("150°", 0, 0);
  popMatrix();
}
```

CONCLUZII

Radarul realizat de mine poate ajuta un incepator pasionat de electronica sa inteleaga mai bine tainele circuitelor electrice, fiind usor si distractiv de realizat.

REFERINTE BIBLIOGRAFICE

- youtube.com
- tinkercad.com
- wikipedia.org